Product: Piezo Siren

Application: Automotive, Home security, Mechanical equipment

Advantage: low current, high SPL; with spare battery, can work when power is shut off.
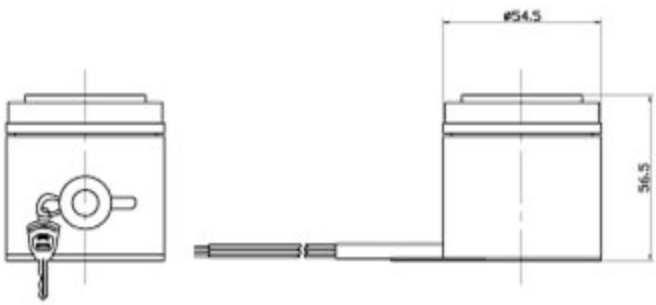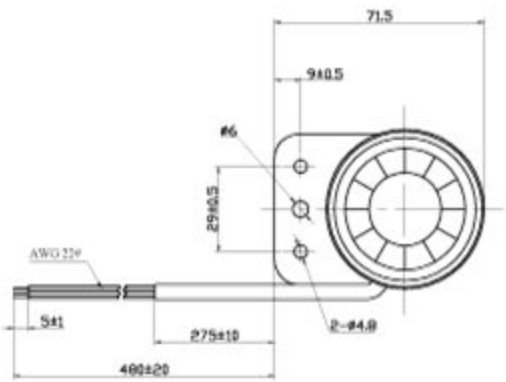
Model No	KPS-1500B
Rated Voltage	12VDC
Operating Voltage	6~15VDC
Max.Rated Current	180mA at12VDC
Min.Sound Pressure Level	98 at12VDC/100cm
Tone Nature	Siren
Case Material	ABS
Operating Temperature	-20~+60℃
Store Temperature	-30~+70℃
Wires Connection	Red+12V
	Green Positive Trigger(+)
	Yellow +12 V Charge up
	Black GND
Weight	150g