Pb-free/PROZ
RoHS-konform
2002 / 95 / EG

GEYER electronic
Be sure with Geyer.

CLOCK OSCILLATORS

SMD-version 1,8V 2,5V 3,0V 3,3V

model	KXO-V97
frequency range	80,1 ~ 160,0 MHz
frequency stability at -20° ~ +70°C at -40° ~ +85°C	 ± 50 ppm ± 100 ppm
operating temperature	standard -20° ~ +70°C available -40° ~ +85°C (=KXO-V97T)
storage temperature	-40° ~ +85°C
symmetry	50% ± 10% at ½ Vcc level
rise & fall time max.	2,5 ns
"O" level max.	+ 0,4V
"1" level min.	Vcc -0,5V
input voltage Vcc	standard + 3,3V ± 10% available +1,8V ±10%/ +2,5V ±10%/ +3,0V ±10%
input current max.	40 mA
output load	15 pF
start up time max.	4 ms
tristate funcion	yes
enable/disable delay time	100 ns max.
random jitter	7pS max.
peak to peak jitter	40pS max.
contents of reel	1000 pcs.
lead-free	since production start
part no.	12.94200 ~ 12.94599

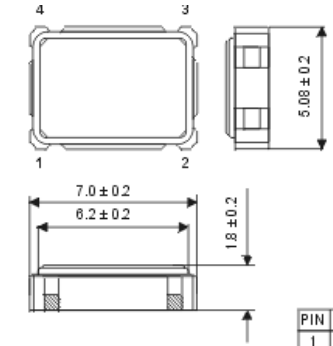

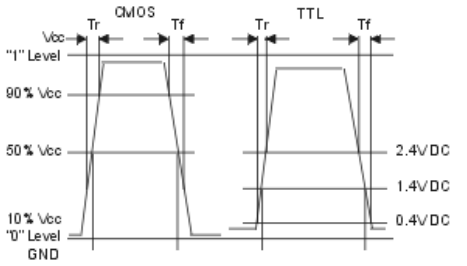

PIN	CONNECTION	
1	"L" (0V)	"H" or OPEN
2	GND	
3	Z	OUTPUT
4	Vcc	

Z: high impedance
f> 80,0 MHz

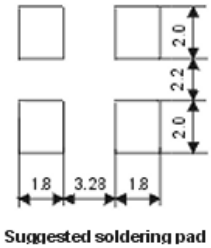

Suggested soldering pad

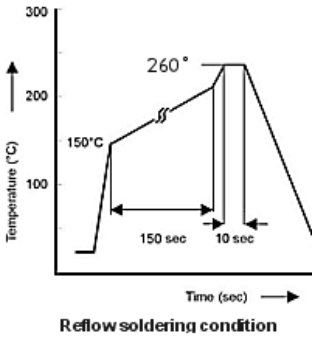

Reflow soldering condition

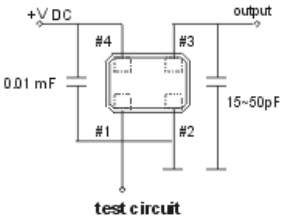

test circuit

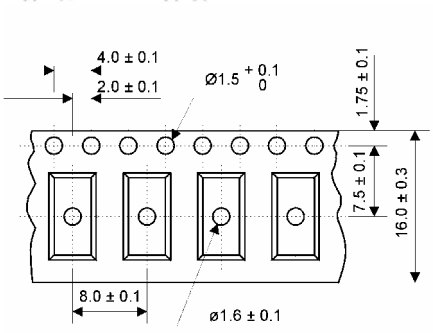

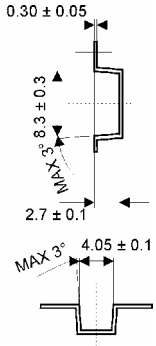

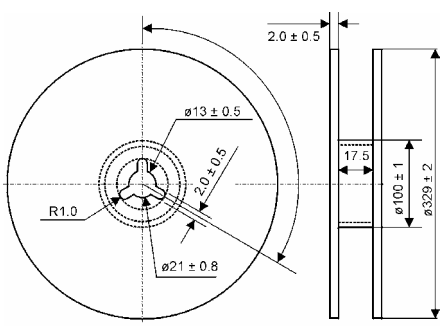

GEYER ELECTRONIC Lochhamer Schlag 5 82166 Gräfelfing/München
Tel. 089/546868-0 Fax 089/546868-91 quartz@geyer-electronic.de

25.10.2006