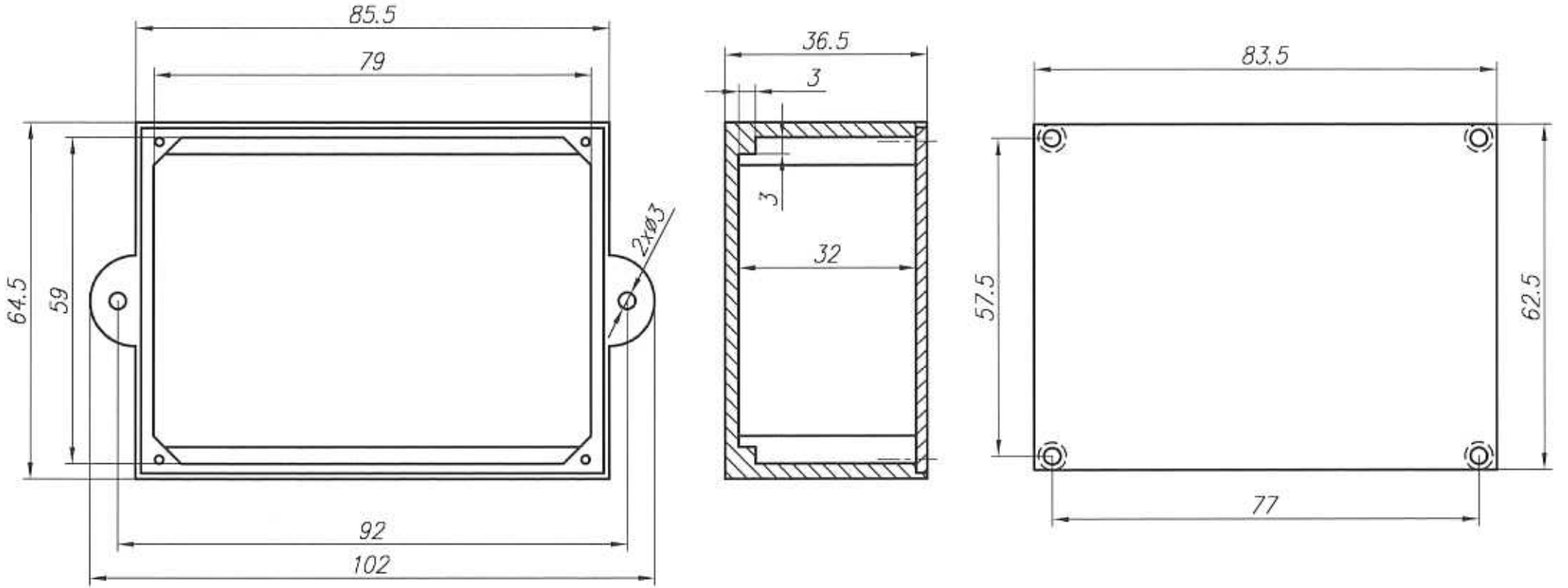

KM–36B