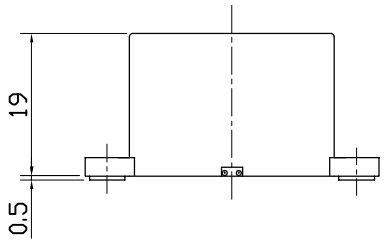

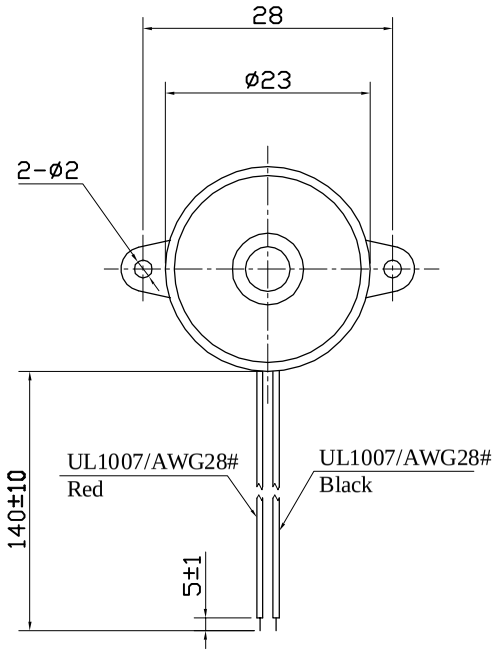

SPECIFICATION

1.Rated Voltage 24VDC
2.Operating Voltage .....20~28VDC
3.Max.Rated Current .....20mA at 24VDC
4.Resonant Frequency .....3.1±0.5KHz
5.Min.Sound Pressure Level.....88dB at 24VDC/30cm
6.Tone Nature .....Continuous
7.Case Material .....ABS
8.Operating Temperature .....-20～+60℃
9.Store Temperature .....-30～+70℃
10.Weight 8g
Red(红).....Positive(+)
Black(黑).....Negative(-)

No.	DESCRIPTION	APPROVED	DATE

TOLERANCES UNLESS NOTED OTHERWISE
.X ±
.XX ±
.XXX ±
90° FORMED ANGLES +2° -1°
FIRST ANGLE PROJECTION

APPROVALS	DATE
DRAWN	
CHECKED	
APPROVED	05.02.04

KEPO NINGBO KEPO ELECTRONIC CO.,LTD
http://www.chinaacoustic.com

Pizeo Buzzer
KPI-2314L

UNIT mm | DWG NO. KP3.840.076
SCALE NOT TO SCALE | SHEET | VER 1.2